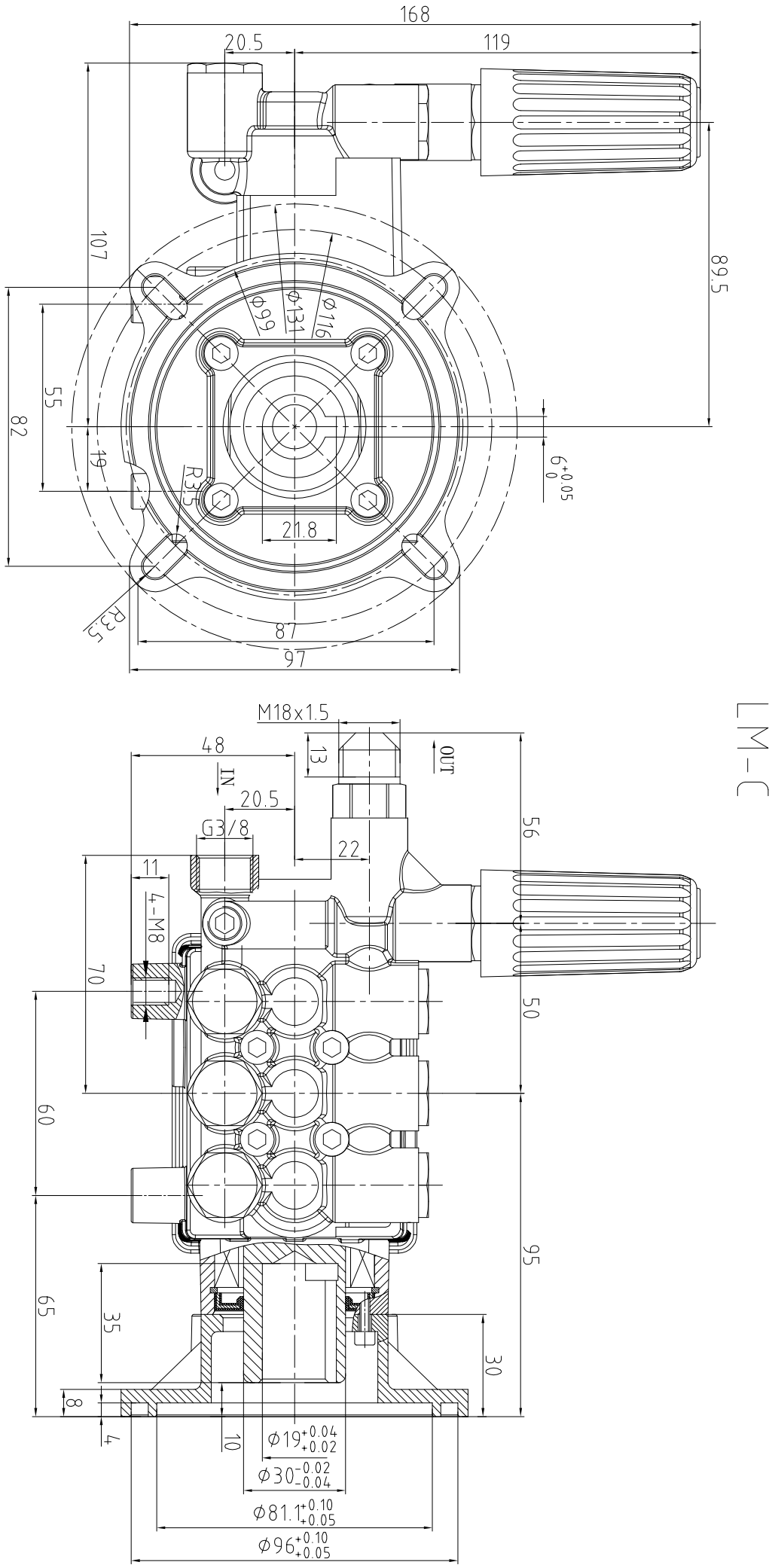
168
20.5
119
107
89.5
Φ99
Φ131
Φ116
55
82
19
R3.5
21.8
6 +0.05 0
R3.5
87
97
M18x1.5
48
13
OUT
IN
20.5
G3/8
22
56
11
4-M8
70
50
60
95
65
35
30
8
4
10
Φ19 +0.04 +0.02
Φ30 -0.02 -0.04
Φ81.1 +0.10 +0.05
Φ96 +0.10 +0.05

LM-C